THIS DRAWING IS UNPUBLISHED. RELEASED FOR PUBLICATION OCT ,2016.
© COPYRIGHT 2016 Tyco Electronics Japan G.K. ALL RIGHTS RESERVED.

REVISIONS
変更

| P | LTR | DESCRIPTION | | DATE | DWN | APVD |
|---|---|---|---|---|---|---|
| | E5 | REVISED | ECR-16-003341 | 14OCT2016 | KF | HY |

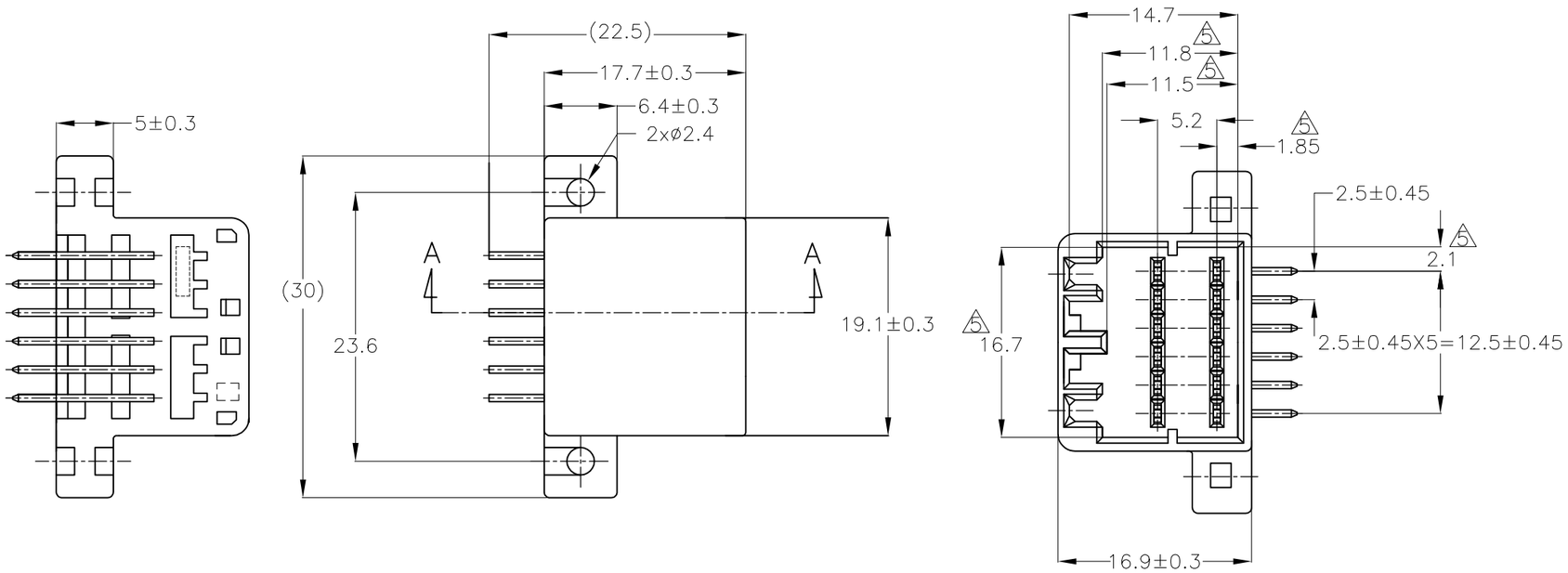


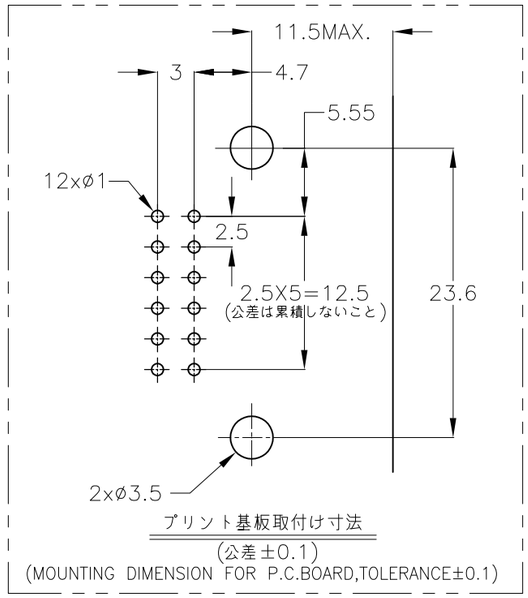


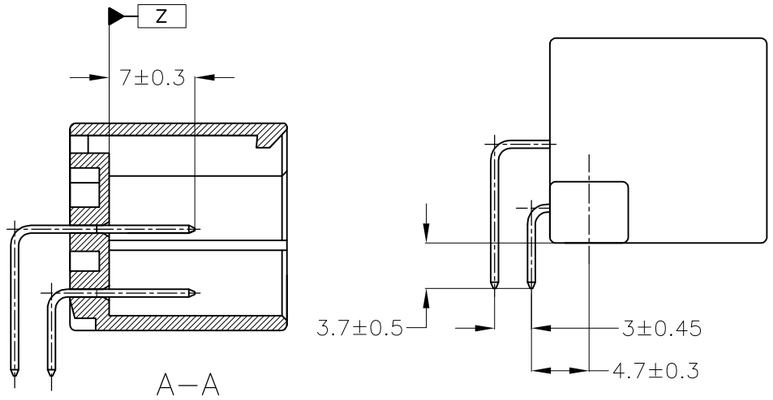


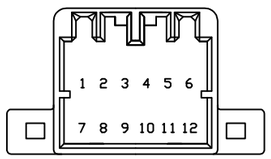


1 APPLICABLE P.C.B. BOARD THICKNESS; 1.6mm
2 RECOMMENDED MOUTING SCREW 3mmDIA 6mmLENGTH(MIN)
TAPPING SCREW SPECIFIED IN JIS B1115,B1122
(TIGHTENING TORQUE;0.392N・m MAX)
3 THE MATING PLUG HSG PART NUMBER;175965
4 APPLICABLE PRODUCT SPEC NO.;108-5281
5 TO BE MEASURED WITHIN 2mm FROM Z
6 CIRCUIT NUMBER.

1 適用プリント基板厚:1.6mm
2 推奨取付ネジ：JIS B1115,B1122 タッピングネジ、
ナベ2種呼び径3、長さ6mm以上（締付トルク：0.392N・m以下）
3 嵌合相手ハウジング：175965
4 適用製品規格番号：108-5281
5 Z より2mmの範囲で測定。
6 回路番号：下図参照のこと。

| | | | | |
|---|---|---|---|---|
| SELECTIVE-TIN (MATTE) | SELECTIVE GOLD X 12 | 1~12 | BLACK | 1-5175974-2 |
| PRE-TIN X 9 | | 1, 2, 8 | GREEN | 2-175974-4 |
| TIN-LEAD | SELECTIVE GOLD X 3 | | | |
| PRE-TIN X 9 | | 1, 2, 8 | BLACK | 2-175974-2 |
| TIN-LEAD | SELECTIVE GOLD X 3 | | | |
| SELECTIVE-TIN (MATTE) | SELECTIVE-TIN | - | BLACK | 175974-3 |
| PRE-TIN | | - | BLACK | 175974-2 |
| SOLDERING SIDE 半田付け部 | CONTACT SIDE 接触部側 | GOLD PLATED CIRCUIT NO 6 金めっき回路番号 | COLOR 色 | PART NUMBER 製品型番 |
| CONTACT FINISH コンタクト仕上 | | | | |

THIS DRAWING IS A CONTROLLED DOCUMENT.

DIMENSIONS: 単位： 粍 mm

TOLERANCES UNLESS OTHERWISE SPECIFIED: 一般公差
0 PLC ± -
1 PLC ± -
2 PLC ± -
3 PLC ± -
4 PLC ± -
ANGLES ± -

TOLERANCE UNLESS OTHERWISE SPECIFIED: 一般公差
0<*≦ 10 : ±0.2
10<*≦ 30 : ±0.25
30<*≦100 : ±0.3
ANGLE ; 角度 ±3°

MATERIAL 材料 HSG : PBT
CONTACT : BRASS

FINISH 仕上 SEE TABLE

| | | |
|---|---|---|
| DWN | A.YAMAGUCHI | 20AUG04 |
| CHK | H.YAMAGAMI | 20AUG04 |
| APVD | S.ISOHATA | 20AUG04 |
| PRODUCT SPEC 製品規格 | 108-5281 | |
| APPLICATION SPEC 取付適用規格 | — | |
| WEIGHT | 4.3 g | |

TE Connectivity

NAME 名称 12POSITION CAP HOUSING ASSEMBLY(H-TYPE)
040 SERIES MULTILOCK I/O CONN MK-II

| SIZE | CAGE CODE | DRAWING NO 番号 | RESTRICTED TO |
|---|---|---|---|
| A3 | 00779 | C-175974 | — |

CUSTOMER DRAWING | SCALE 尺度 2:1 | SHEET 1 OF 1 | REV E5